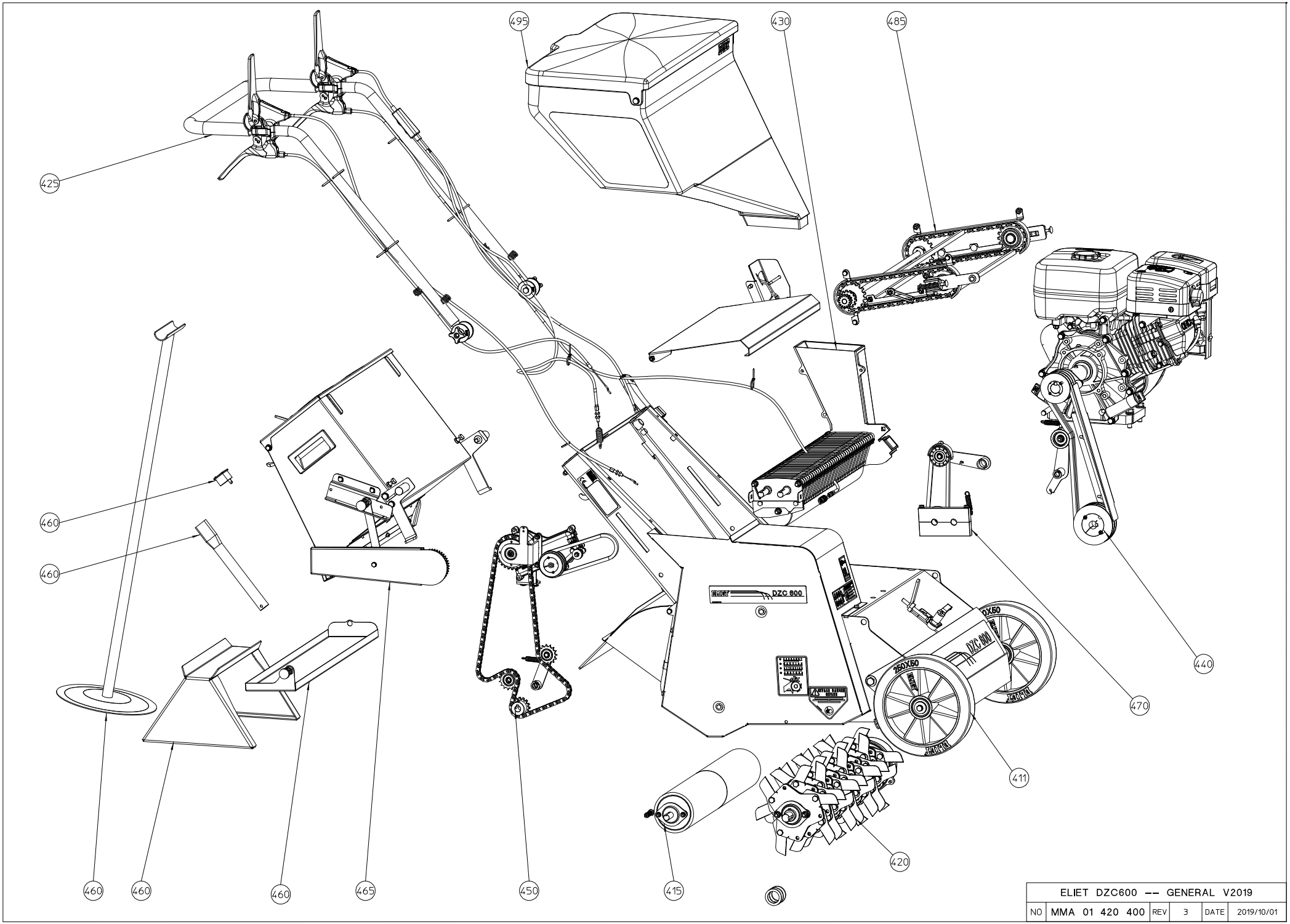

ELIET DZC600 -- GENERAL V2019					
NO	MMA 01 420 400	REV	3	DATE	2019/10/01

#	Order nr	article description	quantity
411	MMA 01 420 411	frame	1
415	MMA 01 420 415	traction roller with differential	1
420	MMA 01 420 420	bladeshaft	1
425	MMA 01 420 425	handlebars	1
430	MMA 01 420 430	seeding unit	1
440	MMA 01 420 440	drive blade shaft	1
450	MMA 01 420 450	drive tractionroll	1
460	MMA 01 420 460	options	1
465	MMA 01 420 465	fertilizer spreader	1
470	MMA 01 420 470	archimedess screw drive	1
485	MMA 01 420 485	drainer protection plate dosing unit	1
495	MMA 01 420 495	seed flow regulation	1

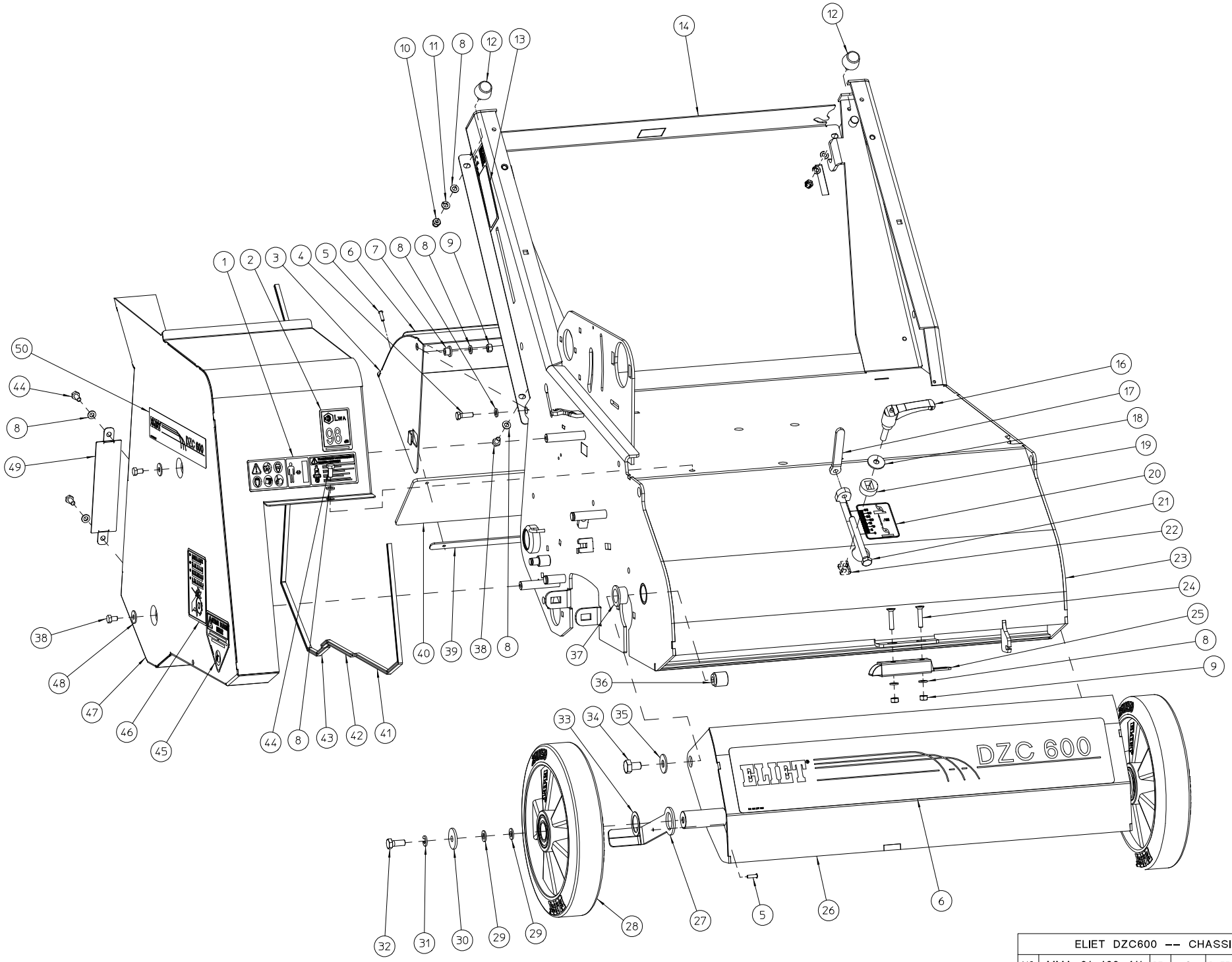

ELIET DZC600 -- CHASSIS					
NO	MMA 01 420 411	REV	2	DATE	2019/10/01

#	Order nr	article description	quantity
1	BQ 505 010 171	safety sticker 70x115 (pictogram)	1
2	BQ 505 112 098	sticker sound level 98 db	1
3	MPA 01 420 115	protective shell behind	1
4	BS 512 000 620	bolt m6x20 din 933	2
5	BB 221 104 140	pop plug alu 3.9x14 din 7337 a	6
6	BQ 501 251 020	label-dzc600 250x44	2
7	BR 112 060 800	nylon bushing with collar (6/10/15x8.5/2)	2
8	BS 531 000 600	washer m6 din 125	13
9	BS 502 000 600	self locking nut m6 din 985	4
10	BS 505 500 600	nut m6 din 1587	2
11	BS 533 000 600	lock washer m6 din 127b	2
12	BR 600 425 170	antivibration blocks 25x17b m6x18	2
13	BQ 505 010 010	identity sticker ce 120x30	1
14	MPA 01 420 865	rear cover	1
16	BN 530 108 305	clamp levers	1
17	MPA 01 420 535	locking lever depth adjustment	1
18	BS 532 008 254	washer m8x25x2	1
19	MPA 01 420 585	stroke end depth adjustment	1
20	BQ 501 251 080	sticker height adjustment knives	1
21	BS 512 000 848	bolt m8x80 din 933	1
22	BS 007 100 800	nut m8 din 508	1
23	MPA 01 420 810	chassis dzc600	1
24	BS 522 100 630	screw m6x30 din 7991	2
25	BO 360 505 180	draw-bolt 0°	1
26	MPA 01 420 460	hinge shell wheels	1
27	MPA 01 420 100	wheel scraper	2
28	BW 325 025 000	rear wheel alu 250/50-60 (e 501 pro)	2
29	BS 531 000 800	washer m8 din 125	4
30	BS 532 008 306	washer m8x30x3	2
31	BS 533 000 800	lock washer m8 din 127b	2
32	BS 512 000 820	bolt m8x20 din 933	2
33	BS 036 002 510	fitting ring 25x35x1mm din 988	2
34	BS 512 001 016	bolt m10x16 din 933	2
35	BS 532 010 274	washer m10x27x2	2
36	MPA 01 420 105	hinge axis shell	2
37	BR 112 201 500	nylon bushing with collar (20/24/30x15/2)	2
38	BS 512 000 610	bolt m6x10 din 933	4
39	MPA 01 420 330		1
40	BR 900 001 680	rubber	1
41	BR 000 910 370	rubber u-moulding 370mm	1
42	BR 000 910 130	rubber u-moulding 130mm	1
43	BR 000 910 700	rubber u-moulding 700mm	1
44	BS 512 000 614	bolt m6x14 din 933	3
45	BQ 505 010 070	safety sticker 100x80 (hand cuts)	1
46	BQ 505 010 130	safety sticker 100x80 (belt transmission)	1
47	MPA 01 420 540	transmission guard	1
48	BS 532 006 183	washer m6x18x1.5	2
49	MPA 01 420 605	cover plate	1
50	BQ 501 251 010	label-dzc600 250x44	1

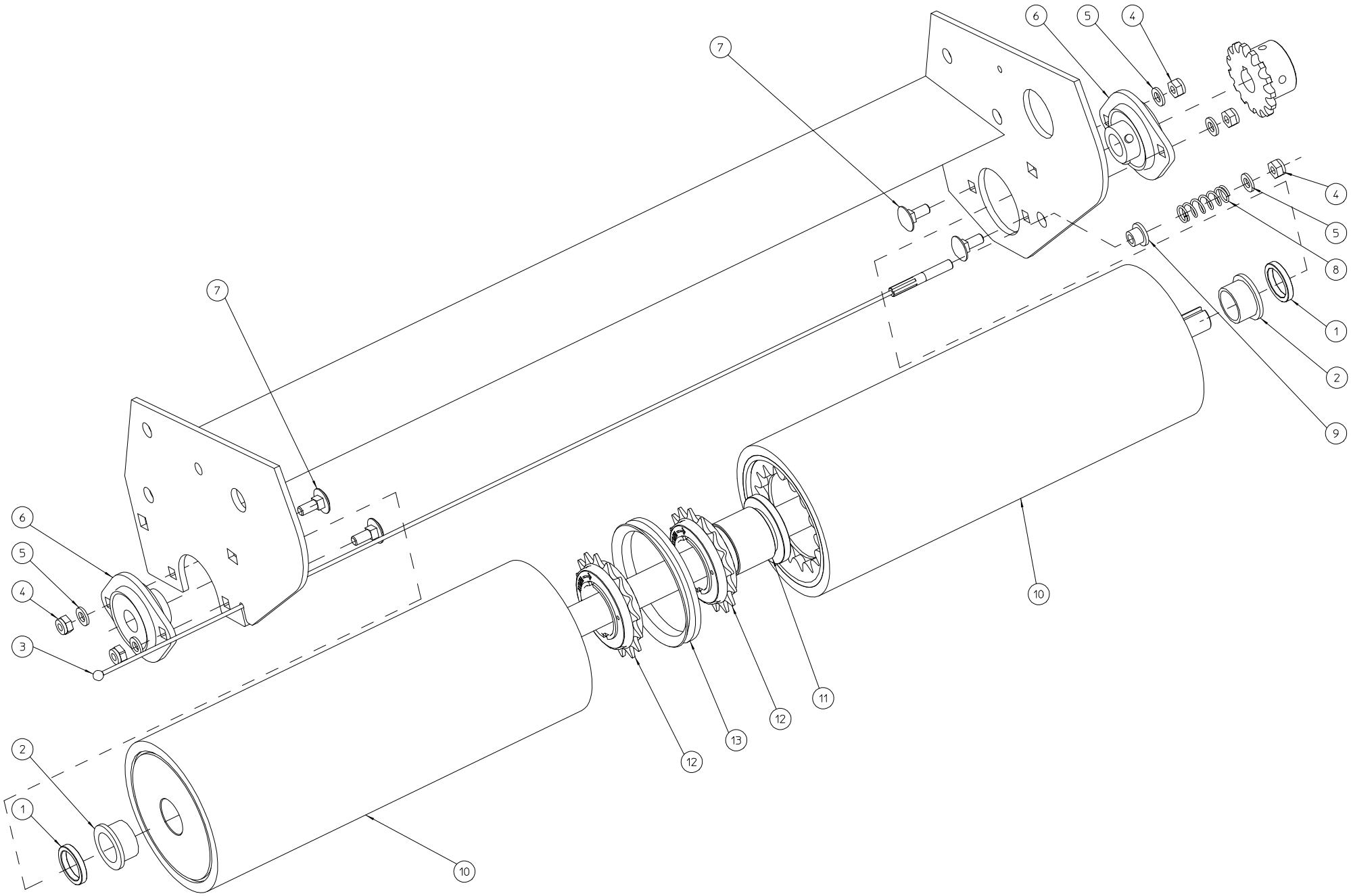

ELIET DZC600 -- DIFFERENTIAL TRACT. ROLL					
NO	MMA 01 420 415	REV	1	DATE	2019/10/01

#	Order nr	article description	quantity
1	MPA 01 420 575	spacer ring	2
2	BR 112 201 500	nylon bushing with collar (20/24/30x15/2)	2
3	BK 155 250 630	cable 2,5x 49 x 630mm	1
4	BS 502 000 600	self locking nut m6 din 985	5
5	BS 531 000 600	washer m6 din 125	5
6	BL 801 101 500	bearing + flanges aspfl 202	2
7	BS 554 100 616	bolt m6x16 din 603	4
8	BV 925 000 010	compression spring 1,3 x 11 x 33,6	1
9	BR 112 060 800	nylon bushing with collar (6/10/15x8.5/2)	1
10	MPA 01 420 565	rubber roller	2
11	MPA 01 420 570	drive shaft roller	1
12	BA 240 303 416	wheel clutch drive system	2
13	BH 813 080 010	v-ring 80 a	1

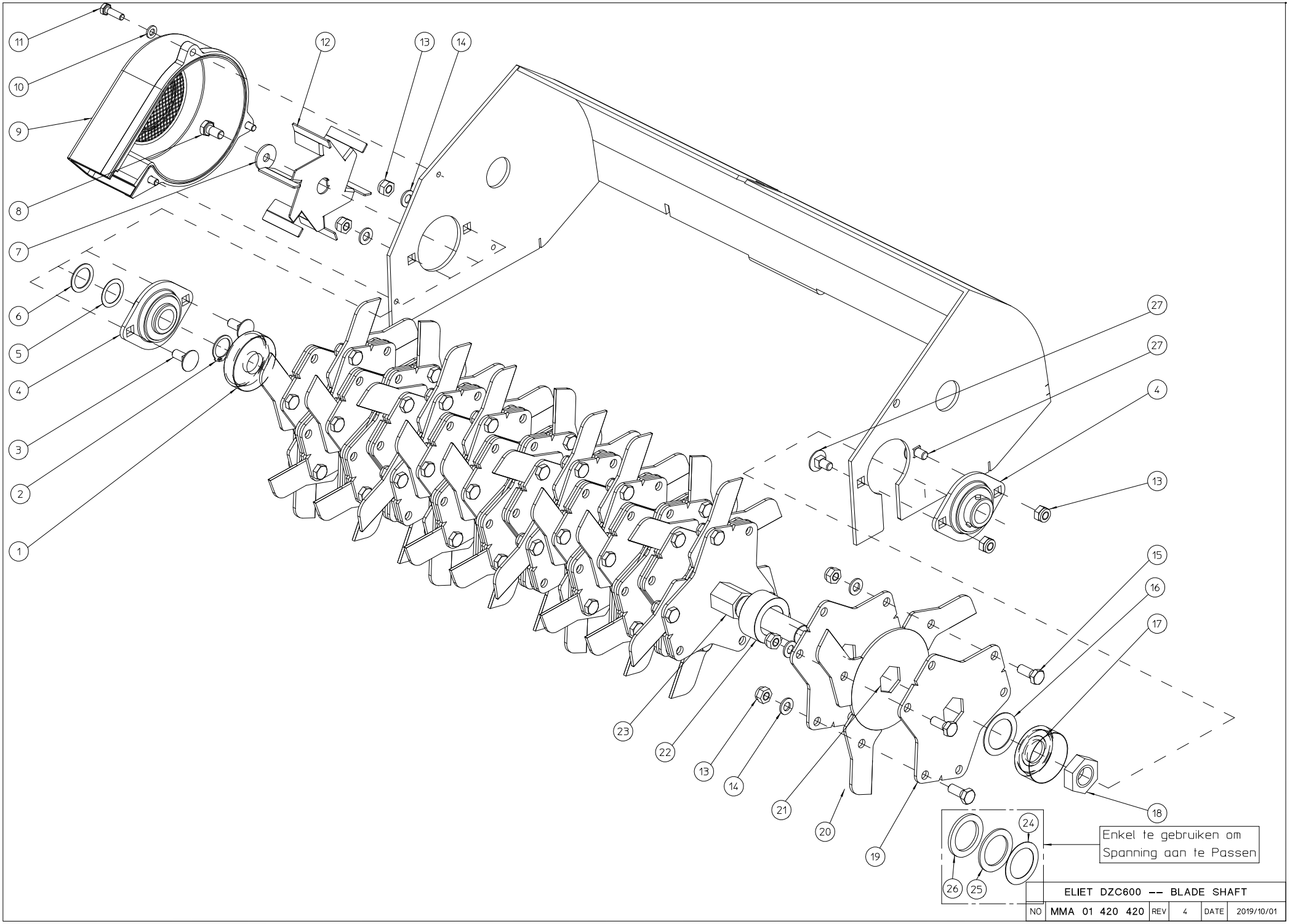

ELIET DZC600 -- BLADE SHAFT					
NO	MMA 01 420 420	REV	4	DATE	2019/10/01

#	Order nr	article description	quantity
1	MPA 01 420 050	support washer blade left	1
2	BB 001 000 200	retaining ring 20 din 471	1
3	BS 554 100 820	bolt m8x20 din 603	2
4	BL 801 102 002	bearing + flanges ucpfl 204	2
5	BS 036 002 005	fitting ring 20x28x0.5mm din 988	1
6	BS 036 002 010	fitting ring 20x28x1mm din 988	1
7	BS 532 008 254	washer m8x25x2	1
8	BS 512 170 816	bolt left hand thread m8 x 1.25	1
9	BR 930 040 090	plastic housing with grid	1
10	BS 531 000 600	washer m6 din 125	3
11	BS 512 000 620	bolt m6x20 din 933	3
12	MPA 01 420 135	fan helix	1
13	BS 502 000 800	self locking nut m8 din 985	61
14	BS 531 000 800	washer m8 din 125	59
15	BS 512 000 820	bolt m8x20 din 933	57
16	BS 036 003 010	fitting ring 30x42x1mm din 988	1
17	MPA 01 420 055	support washer blade right	1
18	BS 501 902 200	nut m22x1.50 din 439	1
19	MPA 01 420 265	knife plate	38
20	BU 102 200 300	loose blade dzc 600	57
21	MPA 01 420 035	spacer knife	19
22	MPA 01 420 060	spacer knife plate	18
23	MPA 01 420 045	blade shaft	1
24	BS 036 003 005	fitting ring 30x42x0,5mm din 988	1
25	BS 036 003 020	fitting ring 30x42x2mm din 988	1
26	BS 036 003 030	fitting ring 30x42x3mm din 988	1
27	BS 554 100 816	bolt m8x16 din 603	2

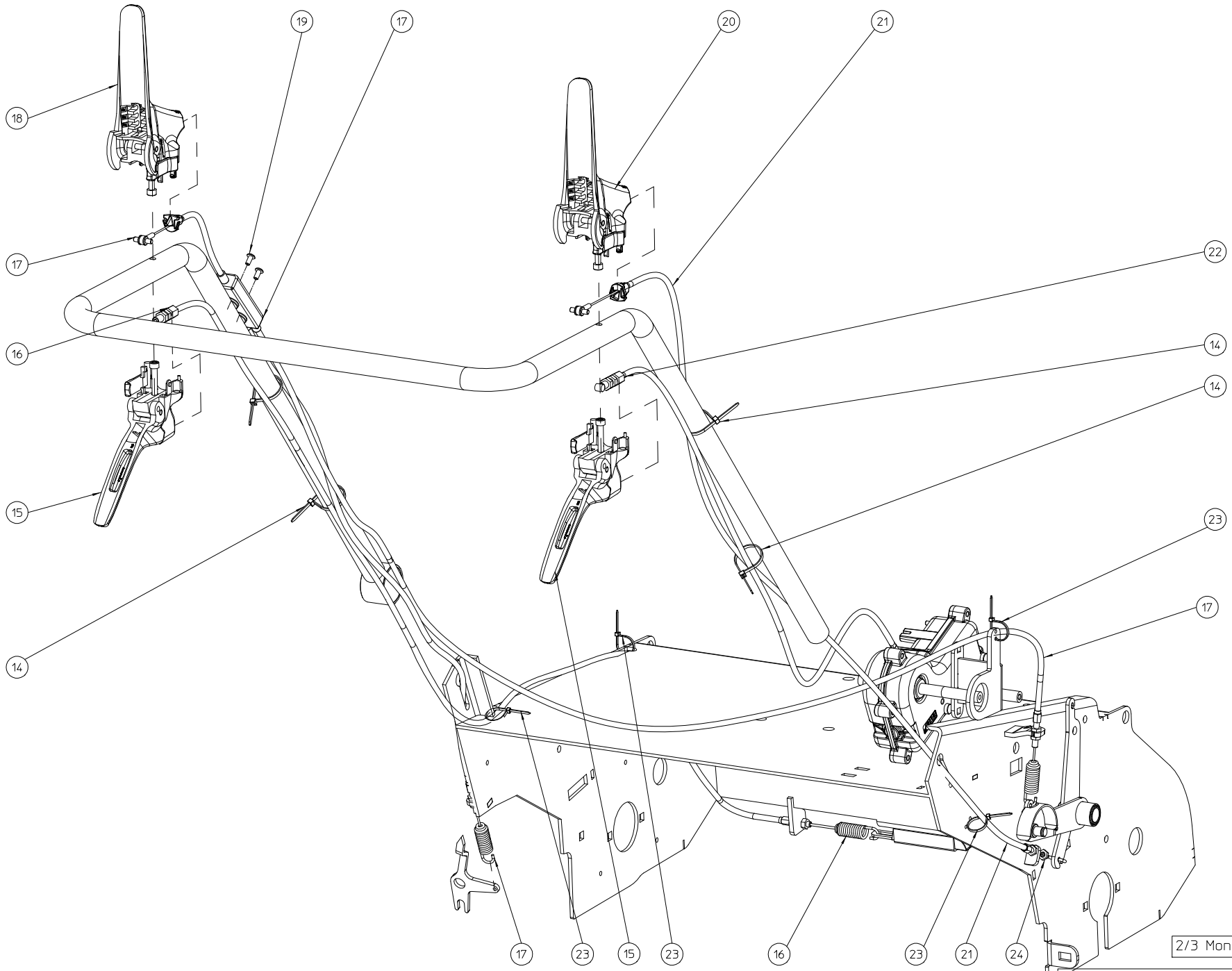

2/3 Montage Stuur

ELIET DZC600 -- HANDLEBARS					
NO	MMA 01 420 425	REV	1	DATE	2019/10/01

#	Order nr	article description	quantity
14	BE 043 010 140	wrap tie 140x3.5	4
15	BN 332 500 870	lever black	2
16	BK 153 181 941	cable operating latch	1
17	BK 153 181 795	control cable + drive with duplicator 1795mm	1
18	BN 332 500 670	lever yellow dzc 600	1
19	BB 221 005 100	pop plug steel 4.8x10 din 7337 a	2
20	BN 332 500 570	lever red dzc 600	1
21	BK 153 181 373	closed control cable	1
22	BK 153 181 216	control cable tractionroll	1
23	BE 043 010 100	wrap tie 100x2.5	4
24	BS 501 900 600	nut m6 din 439	1

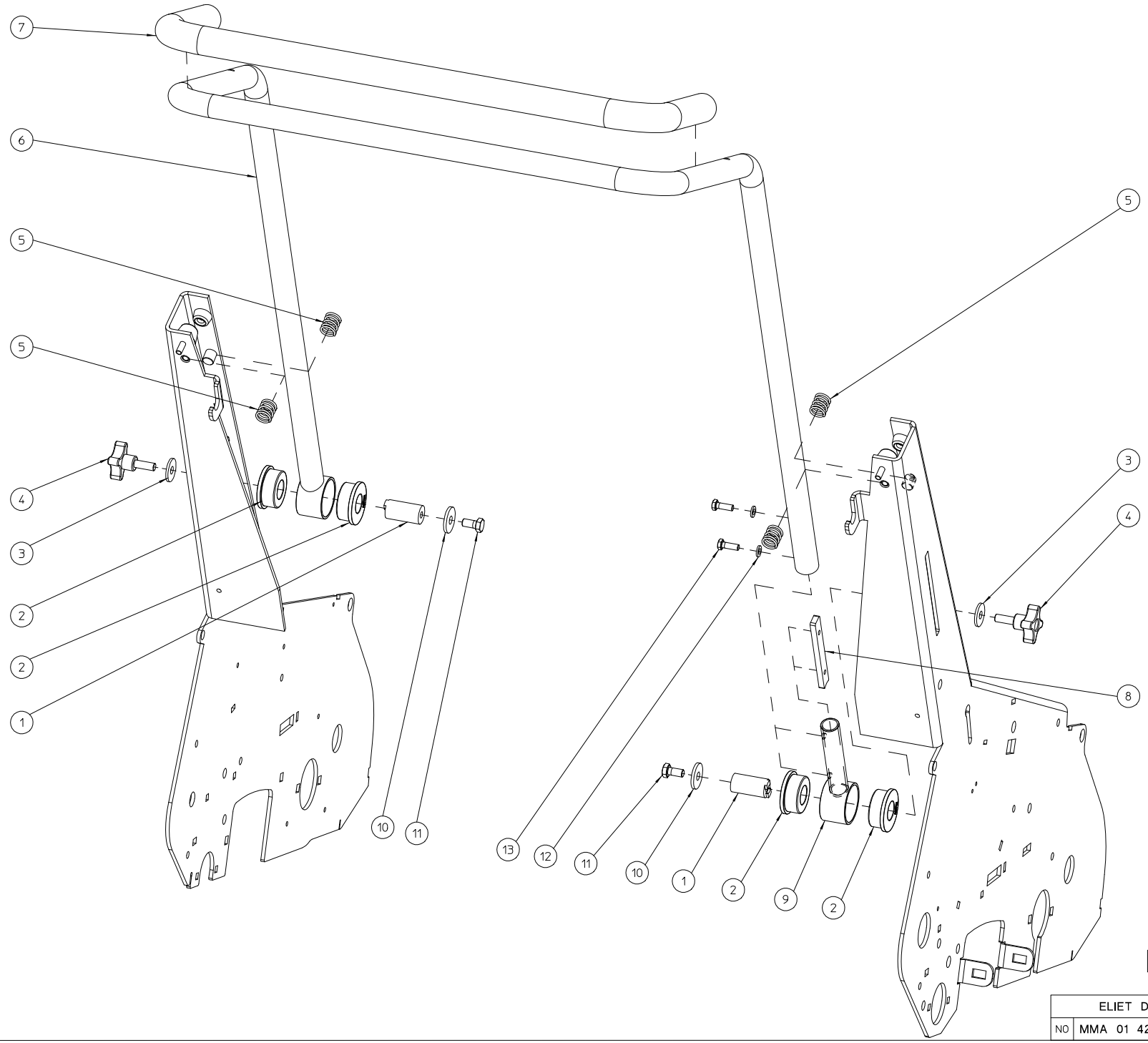

1/3-Montage Stuur

ELIET DZC600 -- HANDLEBARS					
NO	MMA 01 420 425	REV	1	DATE	2019/10/01

#	Order nr	article description	quantity
1	MPA 01 420 875	hinge lift	2
2	BR 900 001 860	silentbloc	4
3	BR 111 080 200	washer nylon 8.4 x 25 x 2.5	2
4	BN 630 208 200	lob knob m8x20	2
5	BV 925 000 040	spring	4
6	MPA 01 420 870	push handle	1
7	BN 231 002 085	soft rubber grip dia 24.5mm (l=805mm)	1
8	MPA 01 480 170	flat fixing handlebars	1
9	MPA 01 480 165	handle hinge	1
10	BS 532 008 306	washer m8x30x3	2
11	BS 512 000 816	bolt m8x16 din 933	2
12	BS 531 000 600	washer m6 din 125	2
13	BS 512 000 618	bolt m6x18 din 933	2

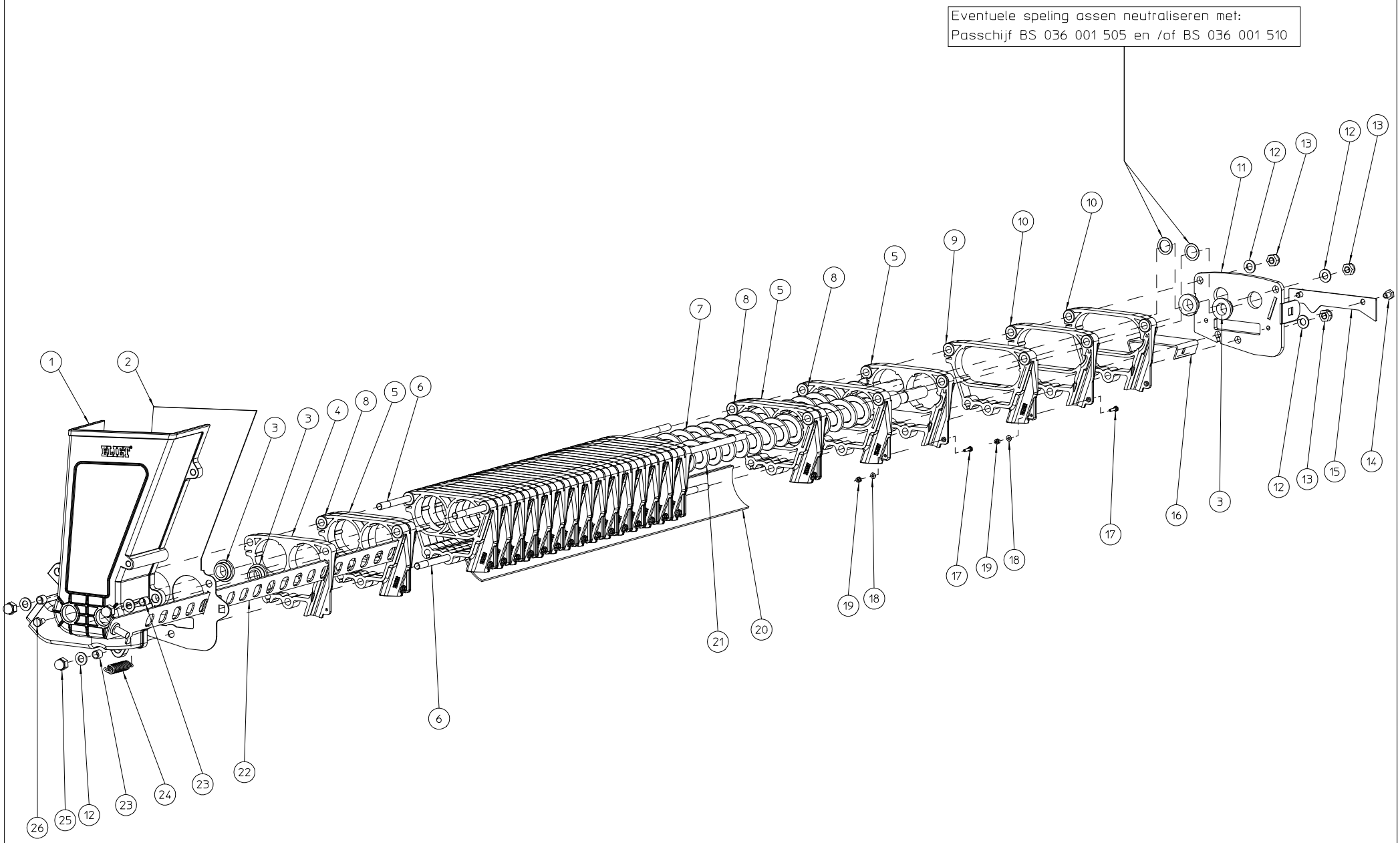

ELIET DZC600 -- SEEDING UNIT					
NO	MMA 01 420 430	REV	3	DATE	2019/10/01

#	Order nr	article description	quantity
1	BR 930 040 100	plastic seedtreter dosing unit	1
2	MPA 01 420 475	seed funnel side plate	1
3	BR 112 151 090	nylon bushing with collar (15/21/27x10/3)	4
4	BR 930 040 050	end seedunitunit	1
5	BR 930 040 030	seedunit right	18
6	MPA 01 420 070	clamprod	3
7	MPA 01 420 205	archimedes' screw drain	1
8	BR 930 040 040	seedunit left	18
9	BR 930 040 070	dispensing unit right	1
10	BR 930 040 060	dispensing unit left	2
11	MPA 01 420 075	closing plate right dosing unit	1
12	BS 531 000 800	washer m8 din 125	6
13	BS 502 000 800	self locking nut m8 din 985	3
14	BS 512 000 608	bolt m6x8 din 933	2
15	MPA 01 420 180	seal plate air duct	1
16	MPA 01 420 230	u support metering unit	1
17	BS 512 000 312	bolt m3x12 din 933	19
18	BS 531 000 300	washer m3 din 125	19
19	BS 502 000 300	self locking nut m3 din 985	19
20	BY 431 306 059	pvc strip Ø5x60x595	1
21	MPA 01 420 270	input seed auger	1
22	MPA 01 420 490	dosing plate	1
23	MPA 01 420 800	spacer bushing	3
24	BV 925 000 030	pull spring 1,8 x 13 x 57	1
25	BS 505 500 800	nut m8 din 1587	3
26	BS 912 000 610	bolt m6x10 din 933 - red	1

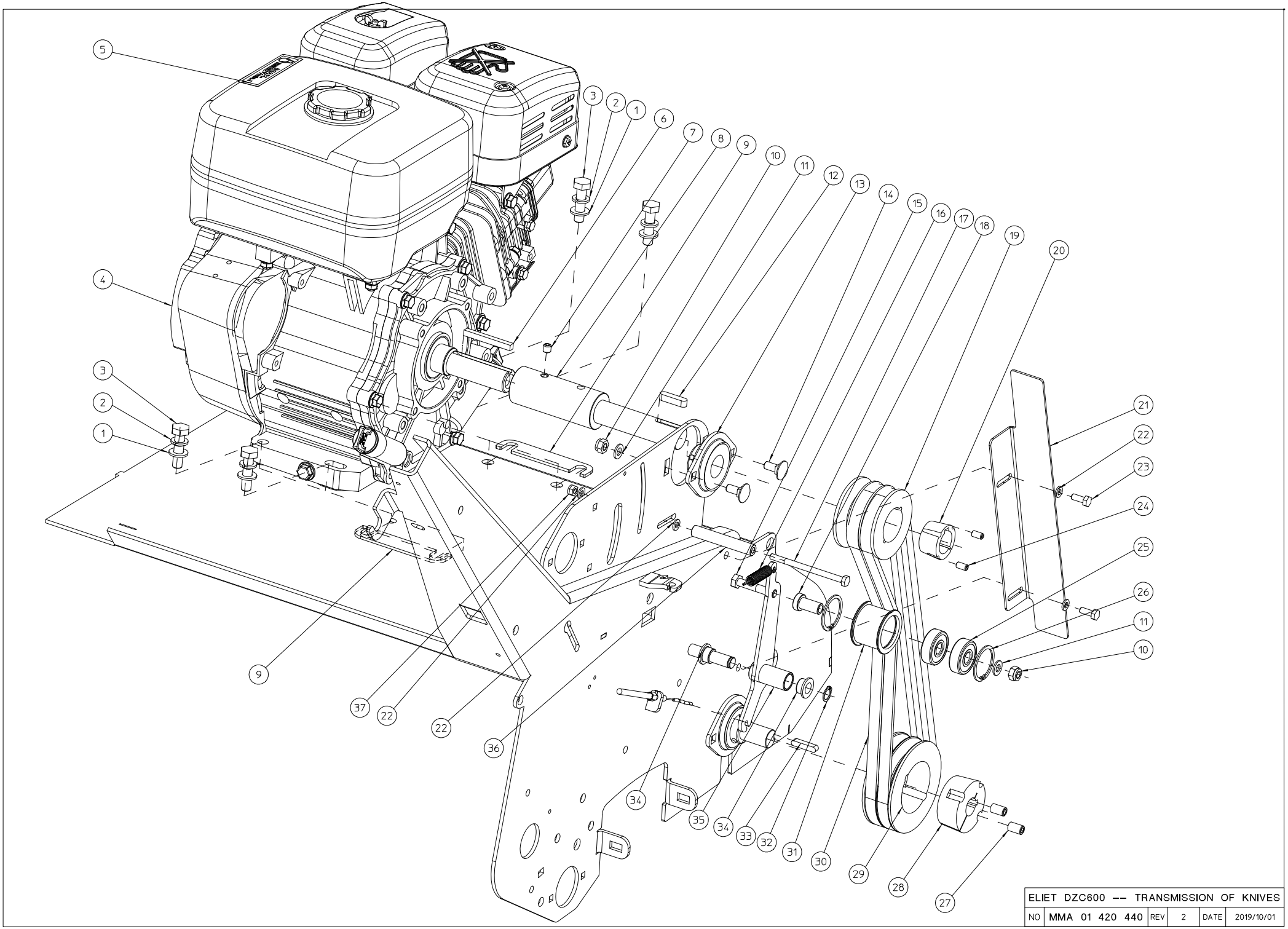

ELIET DZC600 -- TRANSMISSION OF KNIVES					
NO	MMA 01 420 440	REV	2	DATE	2019/10/01

#	Order nr	article description	quantity
1	BS 531 001 000	washer m10 din 125	4
2	BS 533 001 000	lock washer m10 din 127b	4
3	BS 511 001 040	bolt m10x40 din 931	4
4	BM 204 109 000	subaru ex27	1
5	BQ 505 010 020	sticker max 2800 rpm 90x25	1
6	BB 342 060 657	key 6.35x6.35x57 din 6880	1
7	BS 023 000 808	set screw m8x8 din 916	1
8	MPA 01 350 125	extention engineshaft	1
9	MPA 01 420 445	motor thickness	2
10	BS 502 000 800	self locking nut m8 din 985	3
11	BS 531 000 800	washer m8 din 125	3
12	BB 351 080 732	key 8x7x32 din 6885a	1
13	BL 801 102 500	bearing + flanges aspfl 205	1
14	BS 554 100 820	bolt m8x20 din 603	2
15	BS 511 000 841	bolt m8x45 din 931	1
16	BV 011 011 005	spring 1x11x55	1
17	BS 511 000 649	bolt m6x90 din 931	1
18	MPA 01 350 040	spacer belt tightener galvanized	1
19	BA 562 707 130	pulley spa iii 71 tl1108	1
20	BB 501 112 500	taper lock tl 1108-25	1
21	MPA 01 420 255	belt catcher	1
22	BS 531 000 600	washer m6 din 125	4
23	BS 512 000 616	bolt m6x16 din 933	2
24	BB 501 306 130	set screw 1/4"x1/2"	2
25	BL 001 203 703	bearing 6301 2rz	2
26	BB 002 000 370	retaining ring 32 din 472	2
27	BB 501 310 160	set screw 3/8"x5/8"	2
28	BB 501 132 000	taper lock tl 1610-20	1
29	BA 562 709 521	pulley spa ii 95 tl1610	1
30	BA 527 709 910	belt 4l 390	2
31	MPA 01 350 030	pressure roller belt tightener	1
32	BB 001 000 120	retaining ring 12 din 471	1
33	BB 351 060 630	key 6x6x30 din 6885a	1
34	BR 112 121 090	nylon bushing with collar (12/16/22x10/2)	2
35	MPA 01 420 515	support pressure roller	1
36	MPA 01 420 735	tube belt catcher	1
37	BS 502 000 600	self locking nut m6 din 985	1

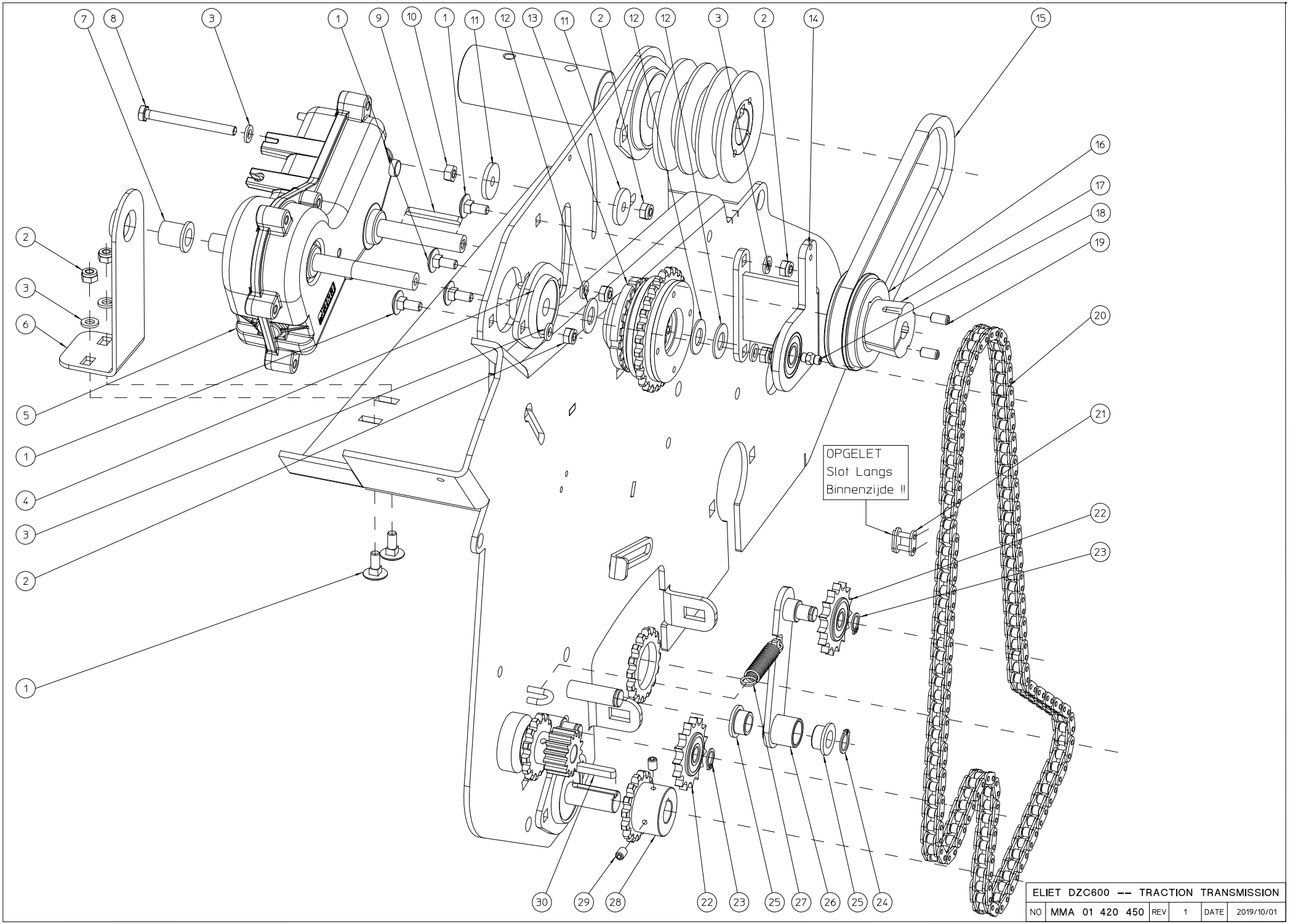

ELIET DZC600 -- TRACTION TRANSMISSION					
NO	MMA 01 420 450	REV	1	DATE	2019/10/01

#	Order nr	article description	quantity
1	BS 554 100 616	bolt m6x16 din 603	6
2	BS 502 000 600	self locking nut m6 din 985	7
3	BS 531 000 600	washer m6 din 125	7
4	BL 801 101 200	bearing + flanges aspfl 201	1
5	BA 670 405 405	reduction gearboxes e600 compactor	1
6	MPA 01 350 135	support gear box	1
7	BR 112 121 900	nylon bushing with collar (12/16/21x19/2)	1
8	BS 512 000 645	bolt m6x65 din 933	1
9	BB 351 040 440	key 4x4x40 din 6885a	1
10	BS 501 000 600	nut m6 din 934	1
11	BS 532 006 276	washer m6x27x3	2
12	BR 111 120 100	nylon bushing (12.2x24x1.3)	3
13	BA 240 107 051	slip coupling 1.70-df t2 17-60nm	1
14	MPA 01 420 480	bearing support	1
15	BA 521 404 870	belt z 487	1
16	BA 561 706 310	pulley spz 63 tl1108	1
17	BB 501 111 200	taper lock tl 1108-12	1
18	BY 100 106 100	grease fitting m6 din 71412	1
19	BB 501 306 130	set screw 1/4"x1/2"	2
20	BA 101 125 020	chain simplex 3/8"x7/32" 125l	1
21	BA 151 200 000	connecting chain link simplex 3/8"x7/32"	1
22	BA 198 010 150	sprocket simplex 3/8"x7/32" 15t + bearing	2
23	BB 001 000 100	retaining ring 10 din 471	2
24	BB 001 000 120	retaining ring 12 din 471	1
25	BR 112 121 090	nylon bushing with collar (12/16/22x10/2)	2
26	MPA 01 420 110	support chain spanner	1
27	BV 011 311 005	spring 1,3x11x55	1
28	BA 171 015 150	sprocket simplex 3/8"x7/32" 15t	1
29	BS 023 000 608	set screw m6x8 din 916	2
30	BB 351 050 532	key 5x5x32 din 6885a	1

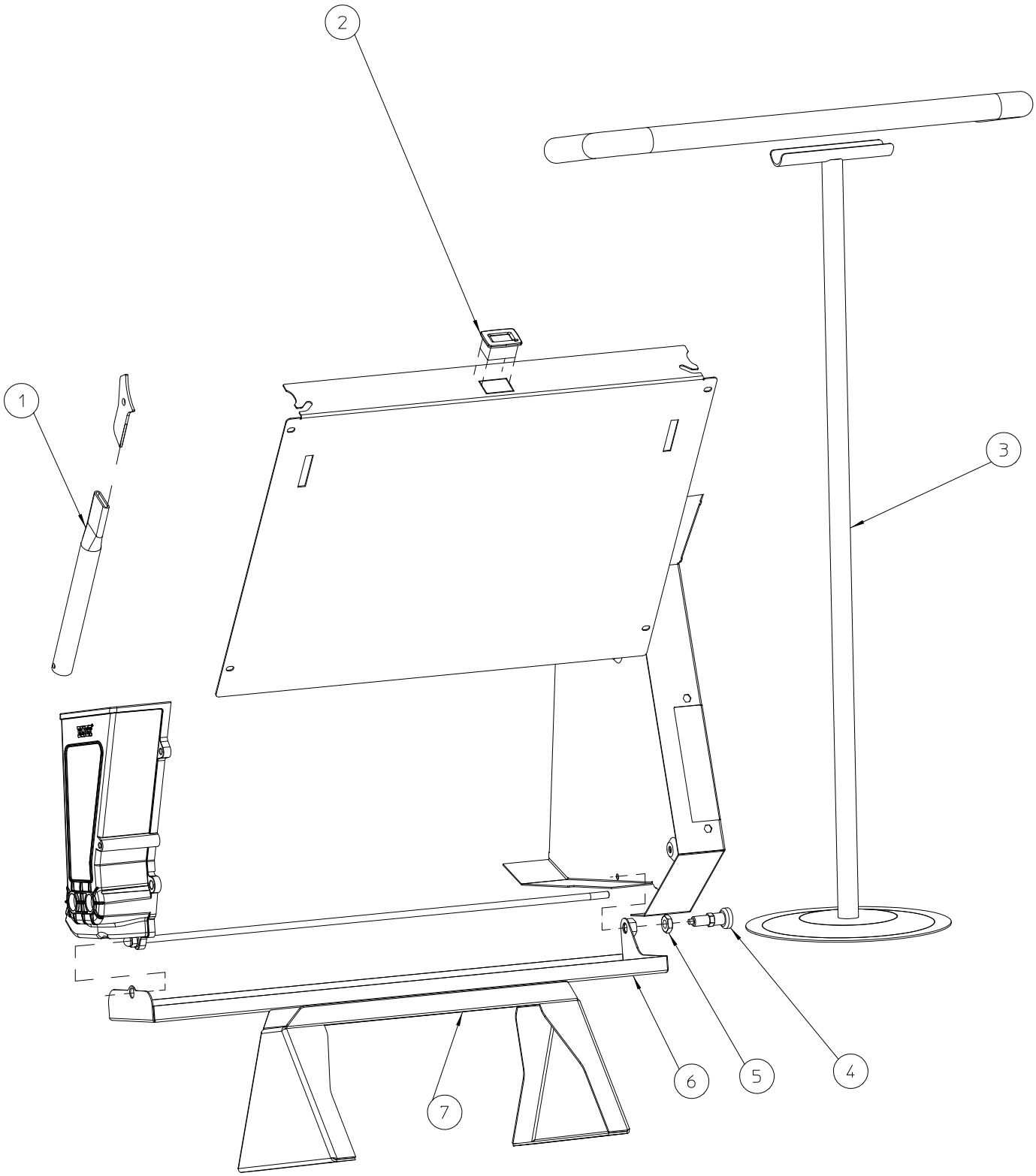

ELIET DZC600 -- OPTIONS					
NO	MMA 01 420 460	REV	2	DATE	2019/10/01

#	Order nr	article description	quantity
1	MPA 01 350 625	knife	1
2	BE 412 430 000	maintenance meter	1
3	MPA 01 420 730	machine lifting stand	1
4	BN 000 212 550	locking bolts with locking groove	1
5	BS 501 901 202	nut m12x1 din 439b	1
6	MPA 01 420 495	seed measuring tray	1
7	MPA 01 420 220	easy clean	1

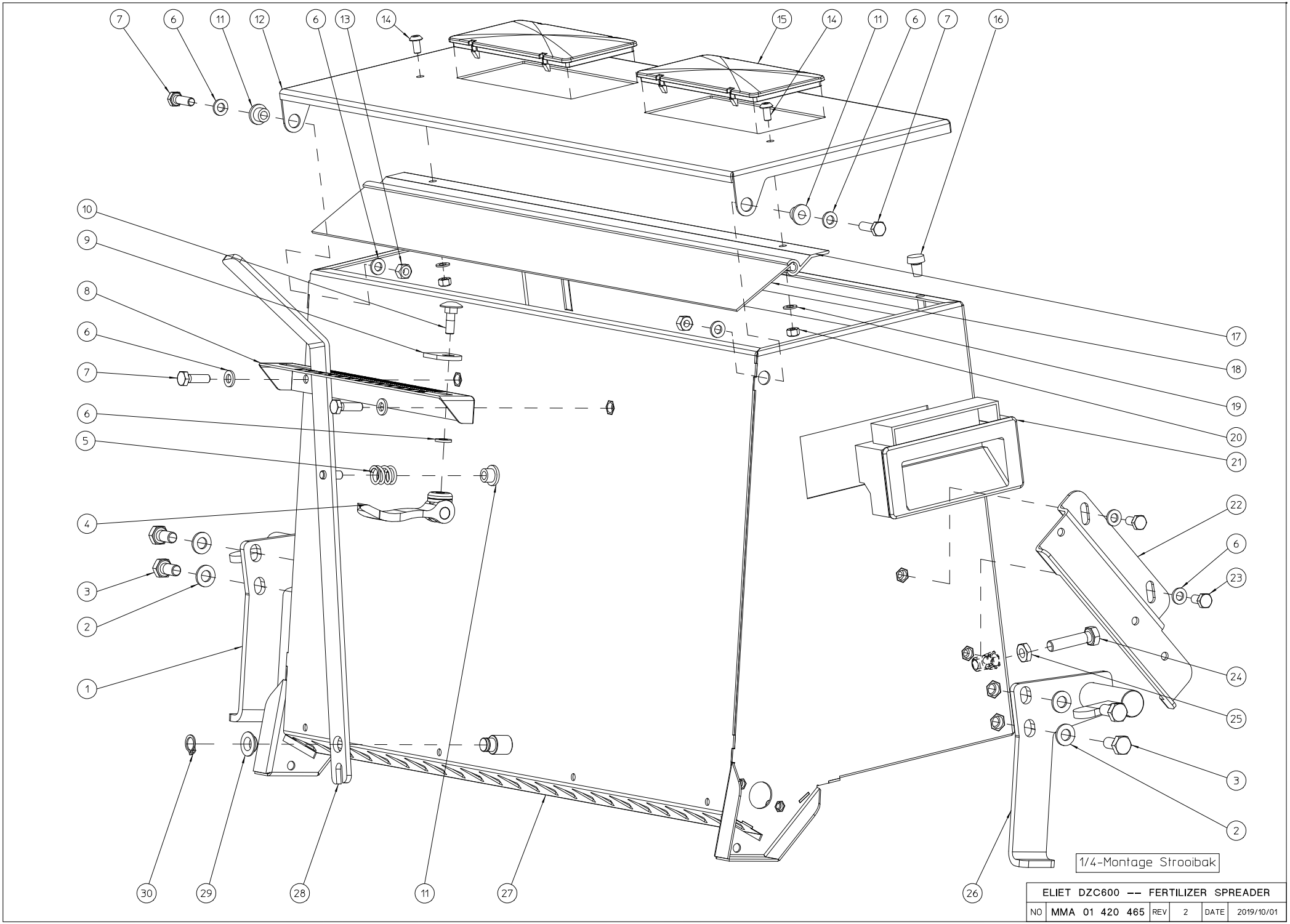

ELIET DZC600 -- FERTILIZER SPREADER					
NO	MMA 01 420 465	REV	2	DATE	2019/10/01

#	Order nr	article description	quantity
1	MPA 01 420 640	lock support left side	1
2	BS 331 000 800	washer m8 din 7349 - stainless	4
3	BS 312 000 816	bolt m8x16 din 933 - stainless	4
4	BN 530 406 631	clamp levers	1
5	BV 911 000 010	spring 14x2x16	1
6	BS 331 000 600	washer m6 din 7349 - stainless	9
7	BS 312 000 620	bolt m6x20 din 933 - stainless	4
8	MPA 01 420 795	setting diagram	1
9	MPA 01 460 025	indicator plate	1
10	BS 354 100 620	bolt m6x20 din 603 - stainless	1
11	BR 112 060 800	nylon bushing with collar (6/10/15x8.5/2)	3
12	MPA 01 420 630	cover	1
13	BS 302 000 600	self locking nut m6 din 985 - stainless	2
14	BS 322 500 510	screw m5x10 iso 7380 - stainless	10
15	BR 930 220 040	window	2
16	BR 602 006 151	rubber bumper	2
17	MPA 01 420 750	aluminium profile	1
18	BY 431 306 057	pvc strip Ø5x60x570	1
19	BS 331 000 500	washer m5 din 7349 - stainless	14
20	BS 302 000 500	self locking nut m5 din 985 - stainless	10
21	BN 230 100 600	grip	2
22	MPA 01 420 785	positioning plate	1
23	BS 312 000 612	bolt m6x12 din 933 - stainless	2
24	BS 312 000 835	bolt m8x35 din 933 - stainless	2
25	BS 301 900 800	nut m8 din 439 - stainless	2
26	MPA 01 420 755	lock support right side	1
27	MPA 01 420 625	fertilizer spreader	1
28	MPA 01 420 780	lever	1
29	BR 112 100 590	nylon bushing with collar (10/12/18x5/1)	2
30	BB 001 000 100	retaining ring 10 din 471	2

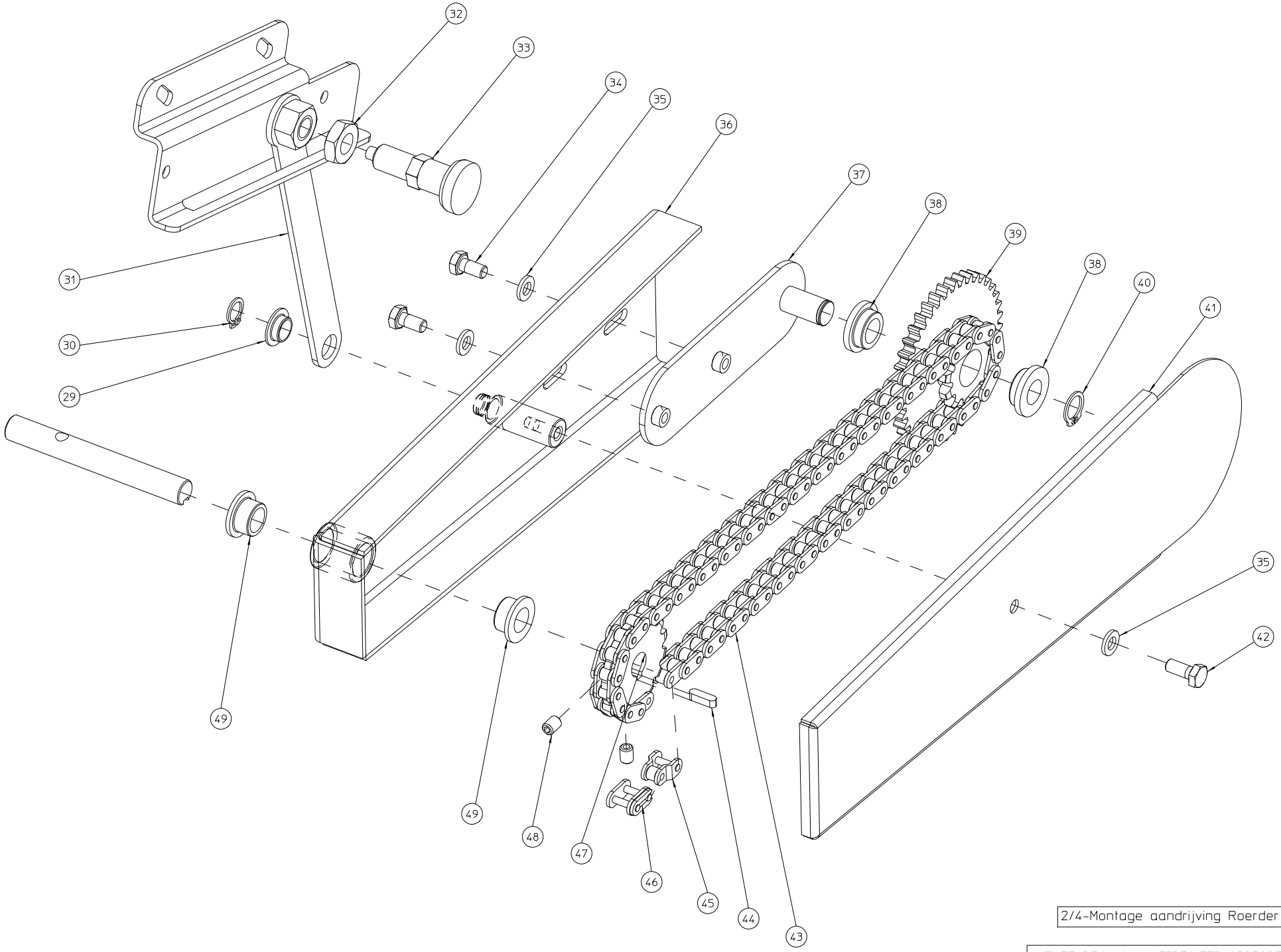

2/4-Montage aandrijving Roerder

ELIET DZC600 -- FERTILIZER SPREADER					
NO	MMA 01 420 465	REV	2	DATE	2019/10/01

#	Order nr	article description	quantity
29	BR 112 100 590	nylon bushing with collar (10/12/18x5/1)	2
30	BB 001 000 100	retaining ring 10 din 471	2
31	MPA 01 420 760	positioning rod	1
32	BS 501 901 202	nut m12x1 din 439b	1
33	BN 000 212 550	locking bolts with locking groove	1
34	BS 512 000 612	bolt m6x12 din 933	2
35	BS 531 000 600	washer m6 din 125	3
36	MPA 01 420 690	transmission housing	1
37	MPA 01 420 695	sprocket support plate	1
38	BR 112 120 890	nylon bushing with collar (12/18/24x8/3)	2
39	MPA 01 420 720	gear/chain sprocket - 40t/12t	1
40	BB 001 000 120	retaining ring 12 din 471	1
41	MPA 01 420 685	transmission guard	1
42	BS 512 000 614	bolt m6x14 din 933	1
43	BA 101 069 020	chain simplex 3/8"x7/32" 69l	1
44	BB 351 040 414	key 4x4x14 din 6885a	1
45	BA 151 400 000	connecting chain link simplex (1/2) 3/8"x7/32"	1
46	BA 151 200 000	connecting chain link simplex 3/8"x7/32"	1
47	BA 161 015 121	sprocket simplex 3/8"x7/32" 15t	1
48	BS 023 000 608	set screw m6x8 din 916	2
49	BR 112 121 090	nylon bushing with collar (12/16/22x10/2)	2

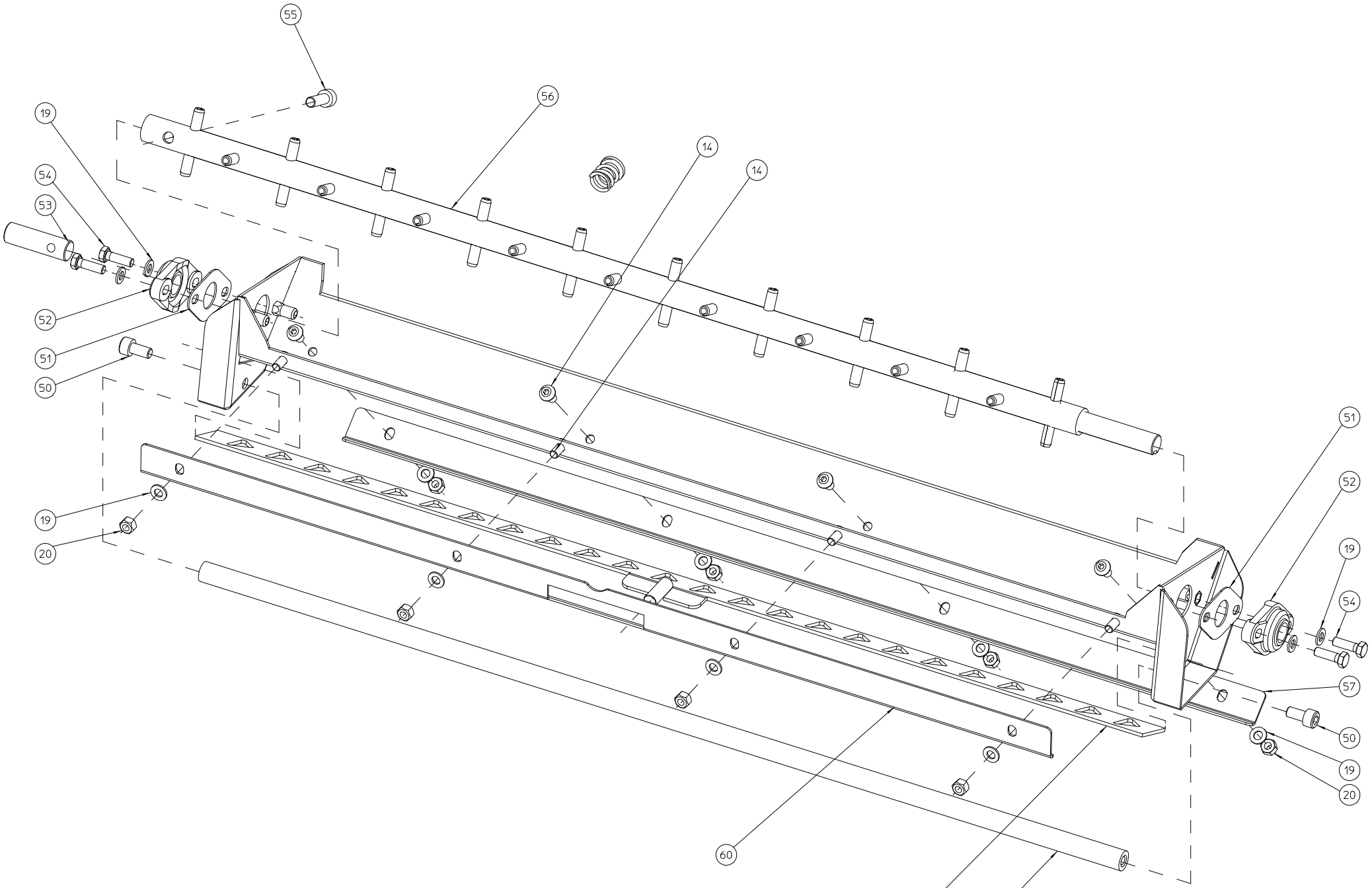

3/4-Montage Roerder

ELIET DZC600 -- FERTILIZER SPREADER					
NO	MMA 01 420 465	REV	2	DATE	2019/10/01

#	Order nr	article description	quantity
14	BS 322 500 510	screw m5x10 iso 7380 - stainless	10
19	BS 331 000 500	washer m5 din 7349 - stainless	14
20	BS 302 000 500	self locking nut m5 din 985 - stainless	10
50	BS 321 100 612	screw m6x12 din 912	2
51	MPA 01 420 670	bearing cover	2
52	BL 855 007 124	flange bearing efom-12	2
53	MPA 01 420 655	shaft end stirring reel	1
54	BS 312 000 516	bolt m5x16 din 933 - stainless	4
55	BS 321 100 620	screw m6x20 din 912	1
56	MPA 01 420 665	stirring reel	1
57	MPA 01 420 770	grid support front side	1
58	MPA 01 420 790	deflector	1
59	MPA 01 420 765	dosing grid	1
60	MPA 01 420 775	grid support rear side	1

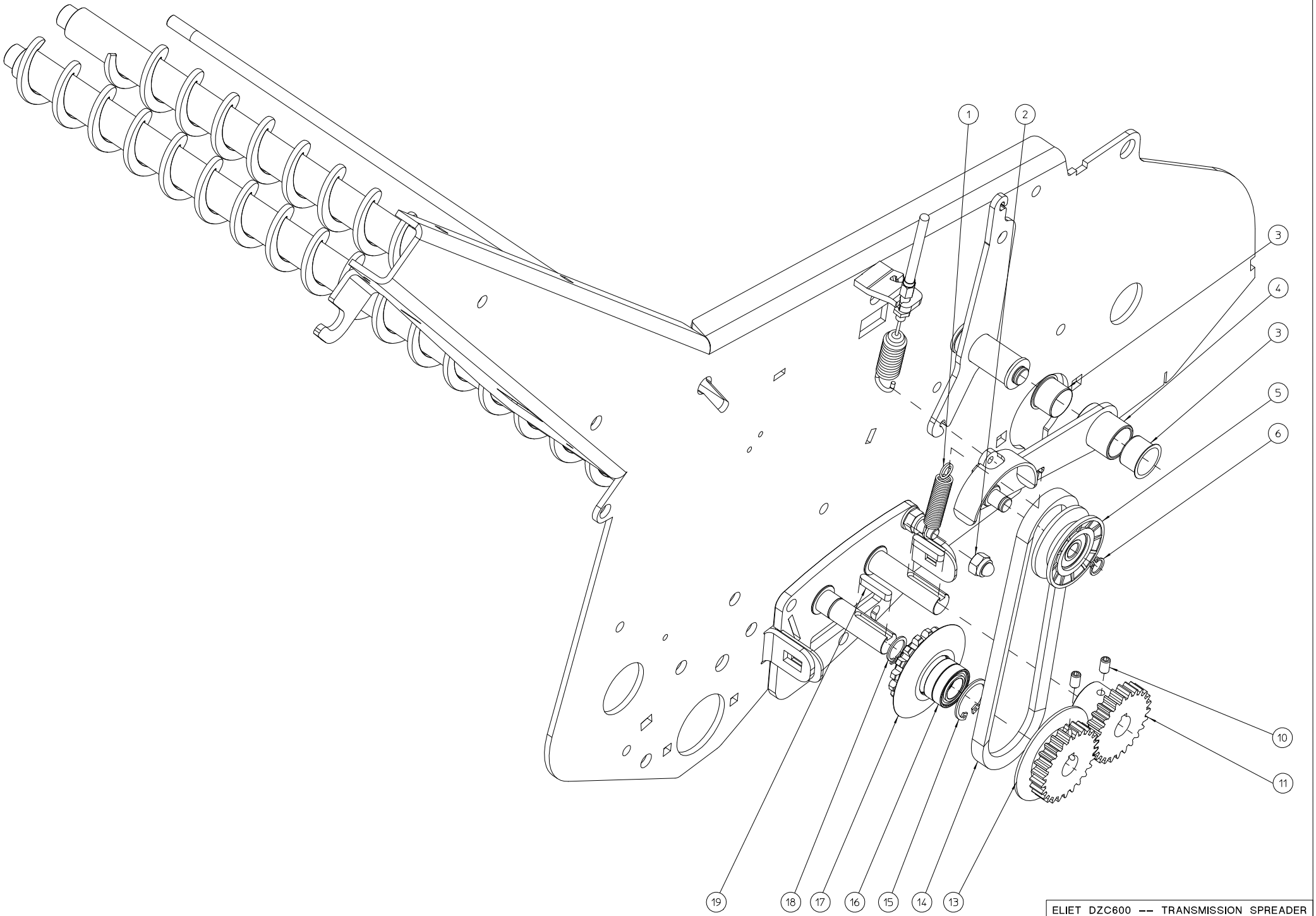

ELIET DZC600 -- TRANSMISSION SPREADER					
NO	MMA 01 420 470	REV	2	DATE	2019/10/01

#	Order nr	article description	quantity
1	BV 011 311 005	spring 1,3x11x55	1
2	BS 505 800 800	nut m8 din 986	1
3	BR 112 201 590	nylon bushing with collar	2
4	MPA 01 420 520	clutch arm seed auger	1
5	BA 599 094 350	idler roller vØ50	1
6	BB 001 000 100	retaining ring 10 din 471	1
10	BS 023 000 610	set screw m6x10 din 916	4
11	BA 602 002 502	gear m2 25t l=31mm	1
13	MPA 01 420 320	gearwheel 25t + 1/2 pully	1
14	BA 521 404 870	belt z 487	1
15	BB 002 000 280	retaining ring 28 din 472	1
16	BL 001 502 803	bearing 6902 llu	2
17	MPA 01 420 315	sprocket wheel 3/8" 16t + 1/2 pully	1
18	BB 001 000 150	retaining ring 15 din 471	1
19	BB 351 050 525	key 5x5x25 din 6885a	2

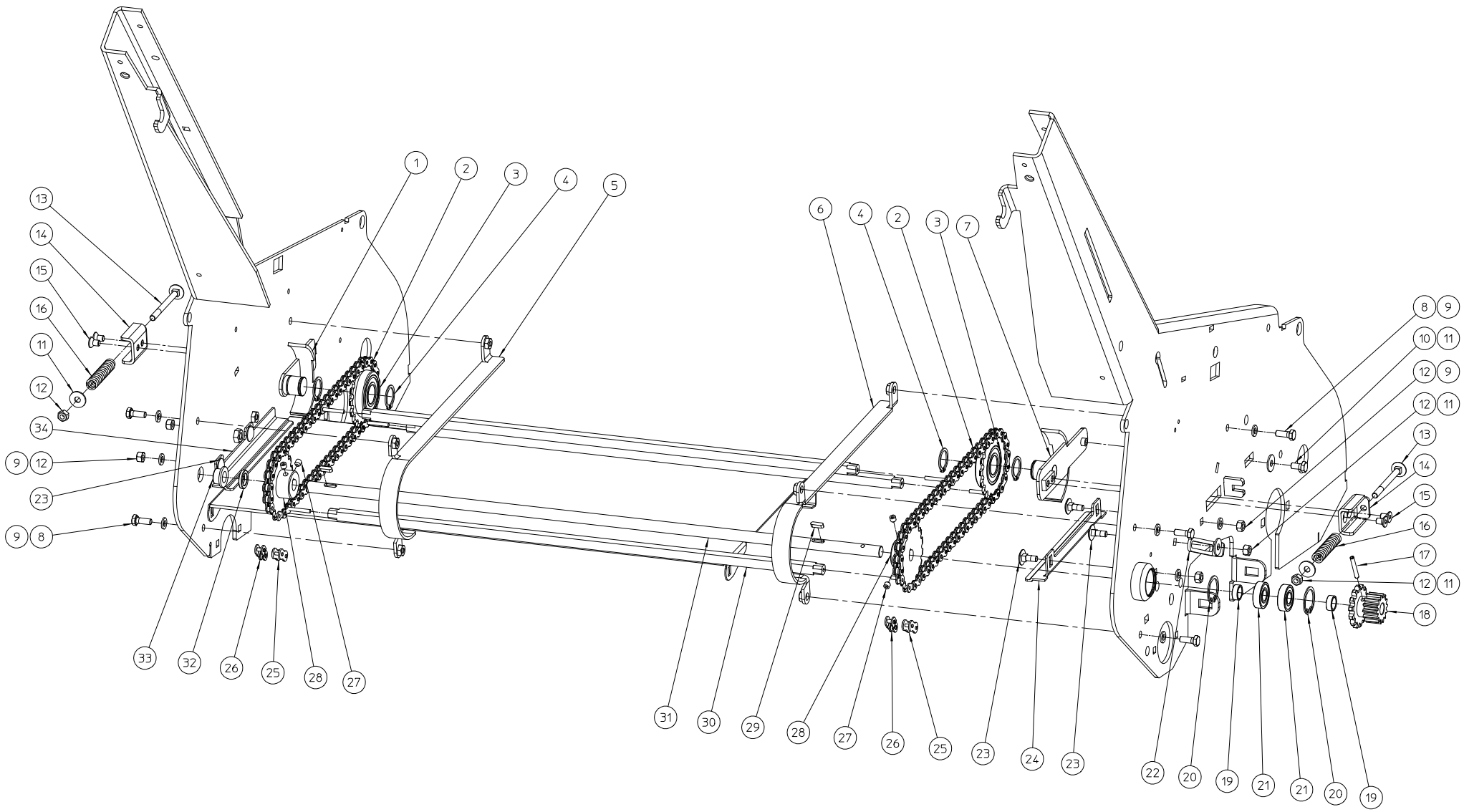

ELIET DZC600 -- EVACUATOR TRANS.					
NO	MMA 01 420 485	REV	1	DATE	2019/10/01

#	Order nr	article description	quantity
1	MPA 01 420 830	tensioning sprocket support left	1
2	BA 111 053 010	chain 1/2' x 1/8' 53 s	2
3	BA 181 017 429	sprocket duplex 1/2'x1/8' 17t + bearing	2
4	BB 001 000 200	retaining ring 20 din 471	4
5	MPA 01 420 840	left chain cover	1
6	MPA 01 420 845	right chain cover	1
7	MPA 01 420 835	tensioning sprocket support right	1
8	BS 512 000 616	bolt m6x16 din 933	6
9	BS 531 000 600	washer m6 din 125	10
10	BS 512 000 612	bolt m6x12 din 933	1
11	BS 532 006 183	washer m6x18x1.5	4
12	BS 502 000 600	self locking nut m6 din 985	7
13	BS 554 100 646	bolt m6x70 din 603	2
14	MPA 01 420 820	fixing bracket for chain tensioner	2
15	BS 522 100 610	screw m6x10 din 7991	4
16	BV 915 000 030	spring	2
17	BB 120 040 300	locking 4x30 din 1481	1
18	MPA 01 420 610	gear/chain sprocket -14t/14t	1
19	MPA 01 420 550	spacer bushing	2
20	BB 002 000 280	retaining ring 28 din 472	2
21	BL 001 202 803	bearing 6001 zz	2
22	MPA 01 420 590	adjustable end of stroke idler sprocket	1
23	BS 554 100 616	bolt m6x16 din 603	5
24	MPA 01 420 855	buttom chain cover right	1
25	BA 111 200 000	connecting chain link simplex 1/2' x 1/8'	2
26	BA 111 400 000	connecting chain link simplex (1/2) 1/2' x 1/8'	2
27	BS 023 000 606	set screw m6x6 din 916	4
28	BA 181 017 121	sprocket 17t 1/2"x 1/8" simplex	2
29	BB 351 040 414	key 4x4x14 din 6885a	2
30	MPA 01 420 860	wiper rod	3
31	MPA 01 420 545	drive shaft cleaning system	1
32	MPA 01 420 380	spacer ring	1
33	BR 112 121 090	nylon bushing with collar (12/16/22x10/2)	1
34	MPA 01 420 850	buttom chain cover left	1

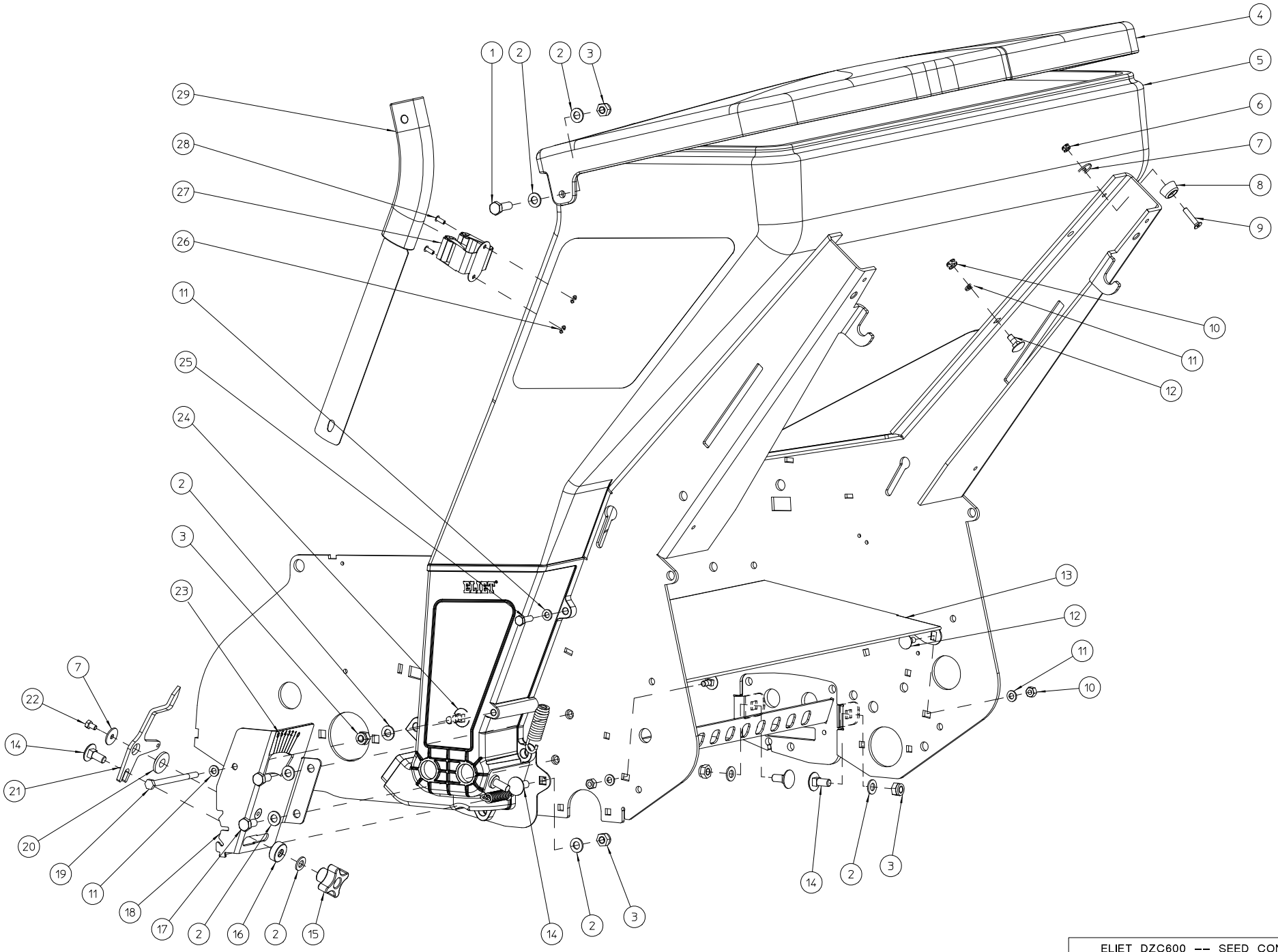

ELIET DZC600 -- SEED CONTAINER					
NO	MMA 01 420 495	REV	3	DATE	2019/10/01

#	Order nr	article description	quantity
1	BS 512 000 825	bolt m8x25 din 933	2
2	BS 531 000 800	washer m8 din 125	11
3	BS 502 000 800	self locking nut m8 din 985	6
4	BR 930 040 020	cover seed container	1
5	BR 930 040 010	seed container	1
6	BS 502 000 500	self locking nut m5 din 985	2
7	BS 532 005 202	washer m5x20x1.5	3
8	BR 625 020 100	rubber foot	2
9	BS 522 100 525	screw m5x25 din 7991	2
10	BS 502 000 600	self locking nut m6 din 985	4
11	BS 531 000 600	washer m6 din 125	7
12	BS 554 100 616	bolt m6x16 din 603	4
13	MPA 01 420 140	protection seed unit	1
14	BS 554 100 820	bolt m8x20 din 603	4
15	BN 630 808 400	lob knob 188-40 m8	1
16	MPA 01 420 225	seed flow adjustment bushing	1
17	BS 512 000 816	bolt m8x16 din 933	2
18	MPA 01 420 485	pivot support dosing plate	1
19	BS 511 000 649	bolt m6x90 din 931	1
20	BR 112 100 600	nylon bushing with collar (10/13.5/25x6/2.5)	1
21	MPA 01 420 510	seed flow indicator	1
22	BS 512 000 508	bolt m5x8 din 933	1
23	BQ 501 251 090	sticker position flat doser	1
24	BS 554 100 825	bolt m8x25 din 603	1
25	BS 512 000 620	bolt m6x20 din 933	2
26	BS 531 000 400	washer m4 din 125	2
27	BG 741 905 111	toolholders	1
28	BB 221 004 100	pop plug steel 3.9x10	2
29	BG 220 225 401	roller scraper	1